THIS DOCUMENT IS TRUE AND CORRECT AT TIME OF PUBLICATION. CONTINUED PRODUCT IMPROVEMENTS MAKE SPECIFICATIONS AND MEASUREMENTS SUBJECT TO CHANGE WITHOUT NOTICE.

NOTES:

1. WHEN INSTALLING THIS UNIT, LOCAL, STATE OR FEDERAL CODES SHOULD BE ADHERED TO. WASTE CONNECTION MUST ADHERE TO LOCAL HEALTH AND PLUMBING CODES.
2. FLOW RATE FOR EYE/FACE WASH IS 5 GPM AND EXCEEDS ANSI STANDARD Z358.1.
3. USE SUPPLIED SCREWS TO INSTALL THE UNIT ON WALL STRUCTURE.
4. DIMENSIONS MAY VARY BY ± 1/2" [12.7mm].

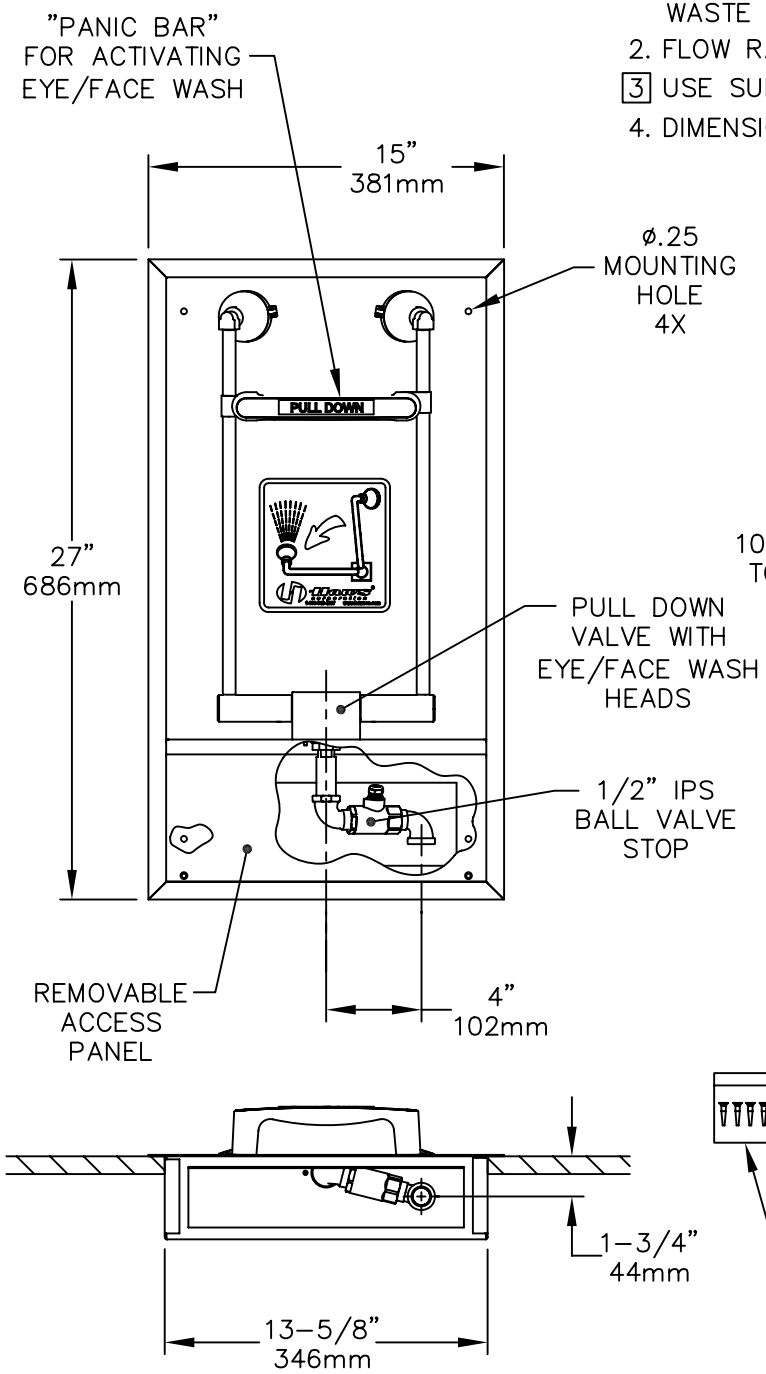

3 MOUNTING HARDWARE SCREW, 14 X 1-1/4" 4X (SUPPLIED)

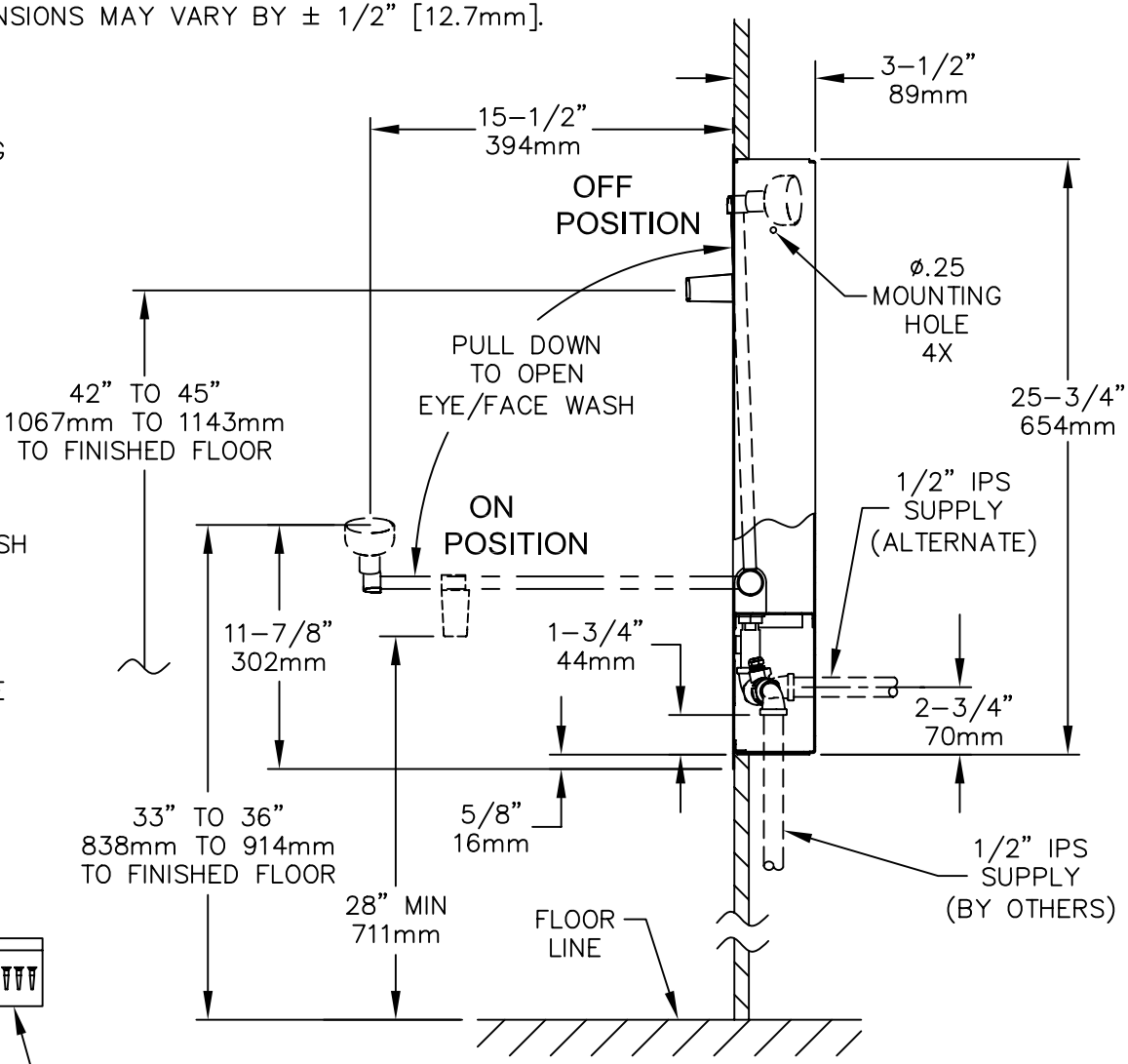

Haws corporation
INFO FAX : 1-888-FAX-HAWS (1-888-329-4297)
1455 Kleppe Ln, Sparks NV, 89431
Phone: 775-359-4712 Fax: 775-359-7424
Haws Ag Bachweg 3 CH-3401 Burgdorf Switzerland
Haws Mfg Pte Ltd 74 Sungei Kadut Loop Singapore 729531
e-mail: Haws@hawsco.com website: www.hawsco.com

ECR NO. .	REVISED PER ECN: 3892	BY: HM	MODEL(S): RECESSED WALL MTD EYE/FACE WASH 7655WC
DRAWN: RTM	DATE: 05/29/03	CHK'D.:	INFO FAX DOC #: 2765592
APPROVED:	DATE:		SCALE: 1:8 DRAWING TYPE: INSTALLATION/FAXBACK

PART NUMBER: 0002080077.D
DRAWING NUMBER: 10907A00 REV. 6
SIZE: A SHT. 1 OF 1

©2006 Haws Corporation - All Rights Reserved HAWS® and other trademarks used in these materials are the exclusive property of Haws Corporation.