THIS DOCUMENT IS TRUE AND CORRECT AT TIME OF PUBLICATION. CONTINUED PRODUCT IMPROVEMENTS MAKE SPECIFICATIONS AND MEASUREMENTS SUBJECT TO CHANGE WITHOUT NOTICE.

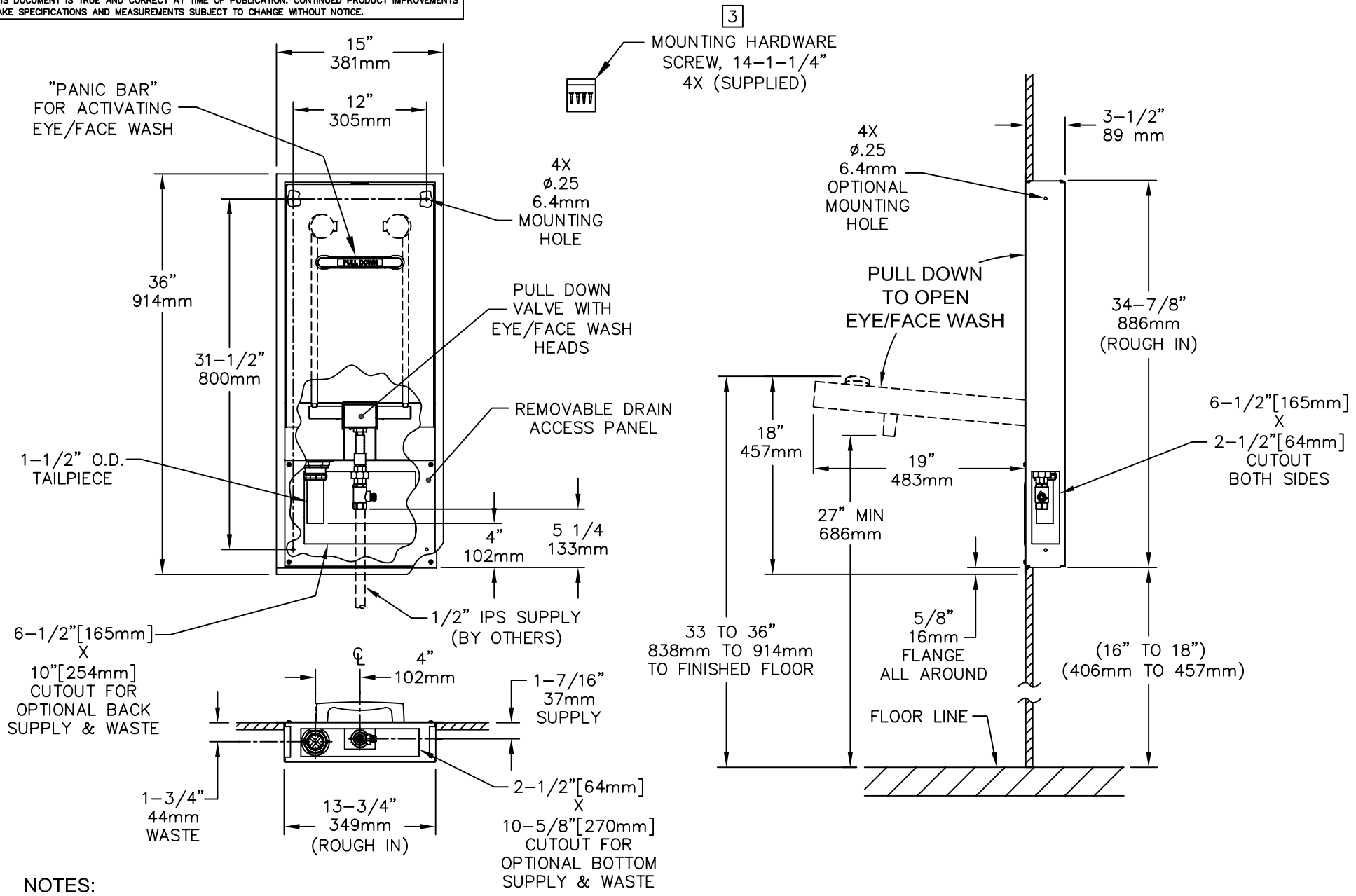

NOTES:

1. WHEN INSTALLING THIS UNIT, LOCAL, STATE OR FEDERAL CODES SHOULD BE ADHERED TO. WASTE CONNECTION MUST ADHERE TO LOCAL HEALTH AND PLUMBING CODES.
2. FLOW RATE FOR EYE/FACE WASH IS 5 GPM AND EXCEEDS ANSI STANDARD Z358.1.
3. USE SUPPLIED SCREWS TO INSTALL THE UNIT ON WALL STRUCTURE.
4. DIMENSIONS MAY VARY BY ± 1/2" [12.7mm].

Haws corporation
INFO FAX : 1–888–FAX–HAWS (1–888–329–4297)
1455 Kleppe Ln, Sparks NV, 89431
Phone: 775–359–4712 Fax: 775–359–7424
Haws Ag Bachweg 3 CH–3401 Burgdorf Switzerland
Haws Mfg Pte Ltd 74 Sungei Kadut Loop Singapore 729531
e–mail: Haws@hawsco.com website: www.hawsco.com

ECR NO.	REVISED PER	BY:	MODEL(S):	PART NUMBER:
.	ECN: 3892	HM	7656WC EYEWASH	0002080088.D
DRAWN: RTM	DATE: 08/20/03	CHK'D.:	INFO FAX DOC #: 2765692	DRAWING NUMBER: 13727A00 REV. 6
APPROVED:	DATE:		SCALE: 1:12 DRAWING TYPE: INSTALLATION/FAXBACK	SIZE: A SHT. 1 OF 1

©2006 Haws Corporation - All Rights Reserved HAWS® and other trademarks used in these materials are the exclusive property of Haws Corporation.