THIS DOCUMENT IS TRUE AND CORRECT AT TIME OF PUBLICATION. CONTINUED PRODUCT IMPROVEMENTS MAKE SPECIFICATIONS AND MEASUREMENTS SUBJECT TO CHANGE WITHOUT NOTICE.

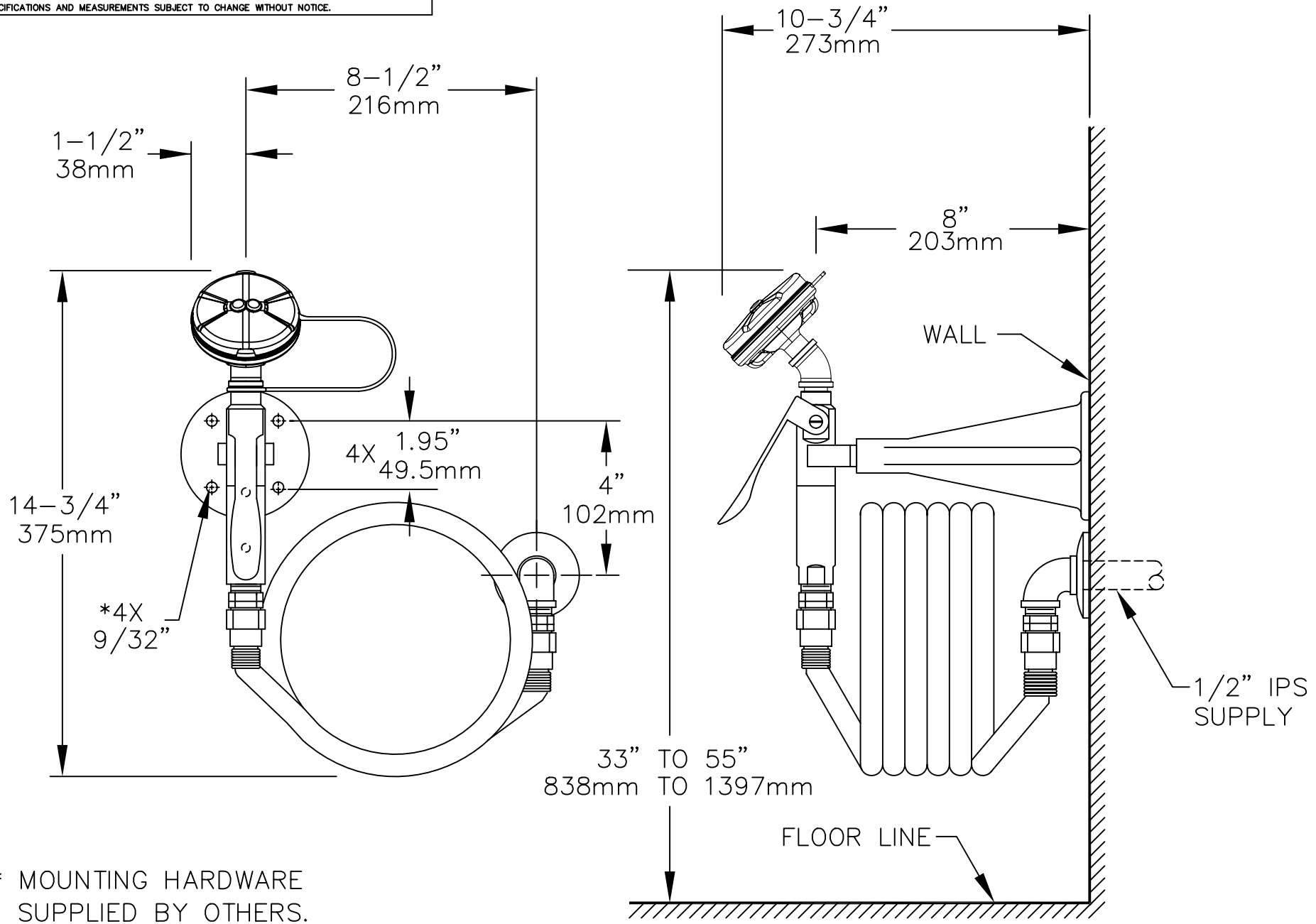

* MOUNTING HARDWARE SUPPLIED BY OTHERS.

THESE DIMENSIONS MAY VARY ± 1/2" (12.7m)

Haws corporation
INFO FAX : 1-888-FAX-HAWS (1-888-329-4297)
1455 Kleppe Ln, Sparks NV, 89431
Phone: 775-359-4712 Fax: 775-359-7424
Haws Ag Bachweg 3 CH-3401 Burgdorf Switzerland
Haws Mfg Pte Ltd 74 Sungei Kadut Loop Singapore 729531
e-mail: Haws@hawsco.com website: www.hawsco.com

ECR NO.	REVISED PER	BY:	MODEL(S):	PART NUMBER:
.	ECN: 4170	IR	8905 WALL MTD EYE/FACE WASH	0002080210.D
DRAWN: C.H.	DATE: 08/95	CHK'D.:	INFO FAX DOC #: 28905	DRAWING NUMBER: 12086A00 REV. 7
APPROVED:	DATE:		SCALE: 1:4 DRAWING TYPE: INSTALLATION/FAXBACK	SIZE: A SHT. 1 OF 1

©2006 Haws Corporation - All Rights Reserved HAWS® and other trademarks used in these materials are the exclusive property of Haws Corporation.