☐ **G1825** Eyewash, Pedestal Mounted, Stainless Steel Bowl
☐ **G1825P** Eyewash, Pedestal Mounted, Plastic Bowl

APPLICATION: Free standing, pedestal mounted eyewash. Two GS-Plus™ spray-type spray heads deliver a flood of water for rinsing eyes.

SPRAY HEAD ASSEMBLY: Two GS-Plus™ spray heads. Each head has a "flip top" dust cover, internal flow control and filter to remove impurities from the water flow.

VALVE: 1/2" IPS chrome plated brass stay-open ball valve. Valve is US-made with chrome plated brass ball and Teflon® seals.

BOWL: 11 1/2" diameter. Bowl is stainless steel (G1825) or orange ABS plastic (G1825P).

PIPE AND FITTINGS: Schedule 40 galvanized steel. Furnished with orange polyethylene covers for vertical piping for high visibility and corrosion resistance.

SUPPLY: 1/2" NPT female inlet.

WASTE: 1 1/4" NPT female outlet.

SIGN: ANSI-compliant identification sign.

QUALITY ASSURANCE: Valve, bowl and spray head assembly is factory assembled and water tested prior to shipment.

Available Options

☐ **BC** Stainless steel bowl cover (G1825 only). Cover protects unit against contaminants. Cover is automatically raised when unit is activated.

☐ **DC** Stainless steel dust cover for each spray head.

☐ **HFC** Hand and foot control. Eyewash is activated by flag handle or foot treadle.

☐ **HS** Auxiliary hand-held drench hose for rinsing eyes, face or body.

☐ **SC** Self-closing ball valve. *Note: Eyewashes with self-closing valves do not comply with ANSI Z358.1 - 2004.*

☐ **TMV** G3600 thermostatic mixing valve precisely blends hot and cold water to deliver warm (tepid) water as required by ANSI Z358.1-2004. Refer to "Tempering Units" section for complete technical and product selection information.

Guardian Equipment
1140 N North Branch St.
Chicago, IL 60622

312 447 8100 TELEPHONE
312 447 8101 FACSIMILE
gesafety.com

ETL Listed 101496.
Units have been tested to and comply with ANSI Z358.1 - 2004

Guardian

☐ **G1825** Eyewash, Pedestal Mounted, Stainless Steel Bowl
☐ **G1825P** Eyewash, Pedestal Mounted, Plastic Bowl

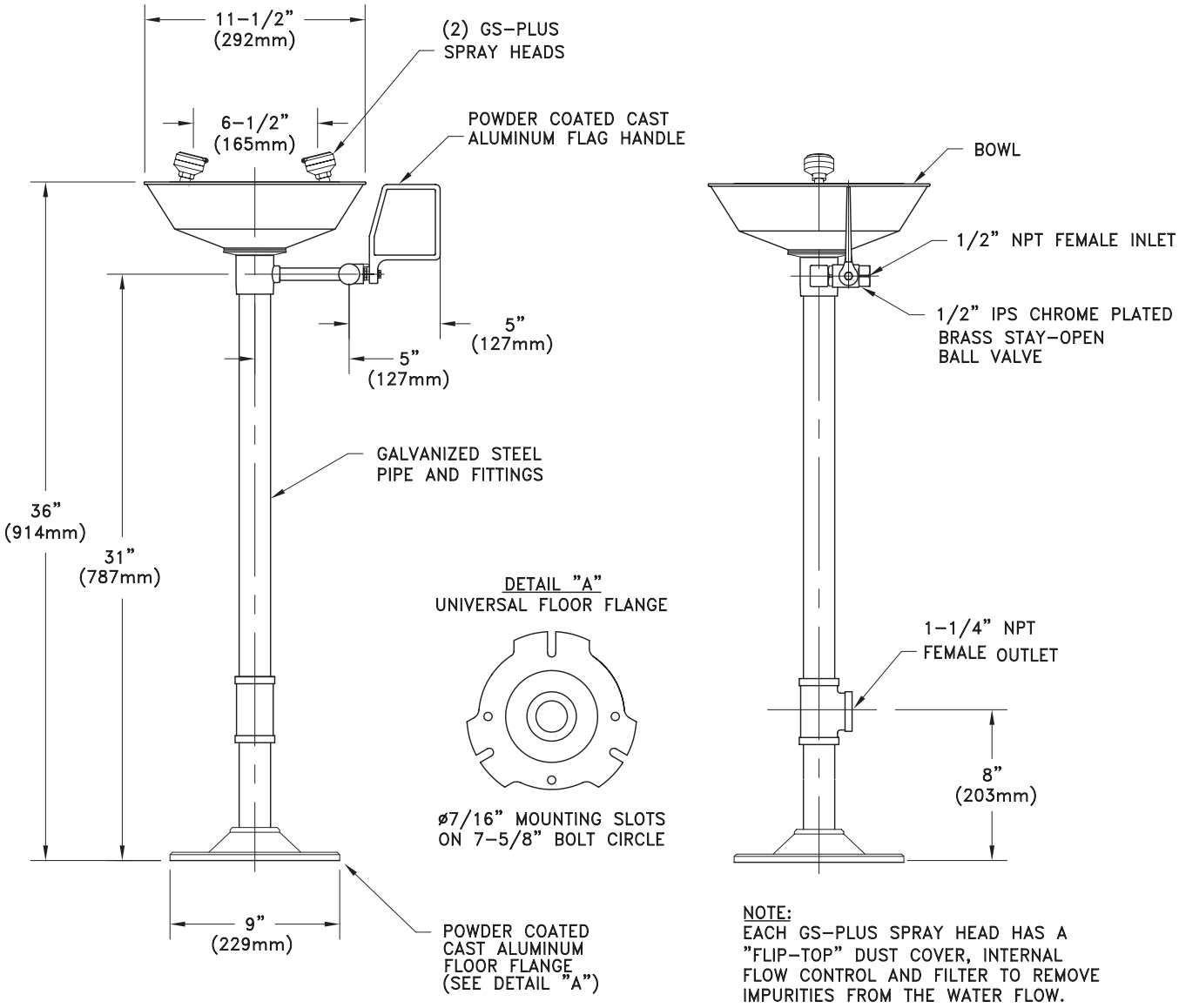

NOTE:
EACH GS-PLUS SPRAY HEAD HAS A "FLIP-TOP" DUST COVER, INTERNAL FLOW CONTROL AND FILTER TO REMOVE IMPURITIES FROM THE WATER FLOW.

THIS SPACE FOR ARCHITECT/ENGINEER APPROVAL

Sign Included

Due to continuing product improvement, the information contained in this document is subject to change without notice. All dimensions are ± 1/4" (6mm). rev. 0308

Guardian Equipment
1140 N North Branch St.
Chicago, IL 60622

312 447 8100 TELEPHONE
312 447 8101 FACSIMILE
gesafety.com

ETL Listed 101496.
Units have been tested to and comply with ANSI Z358.1 - 2004